Angle 0°

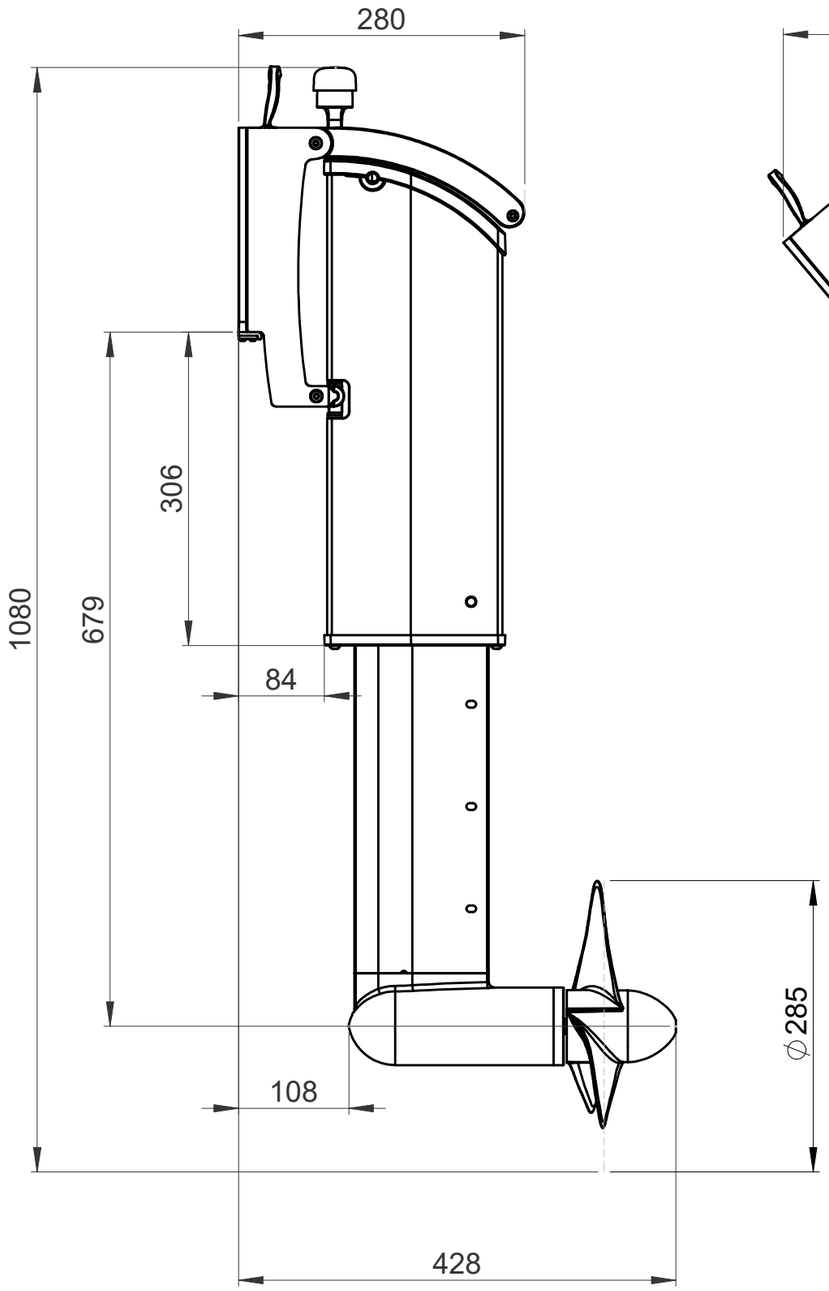

Angle 40°

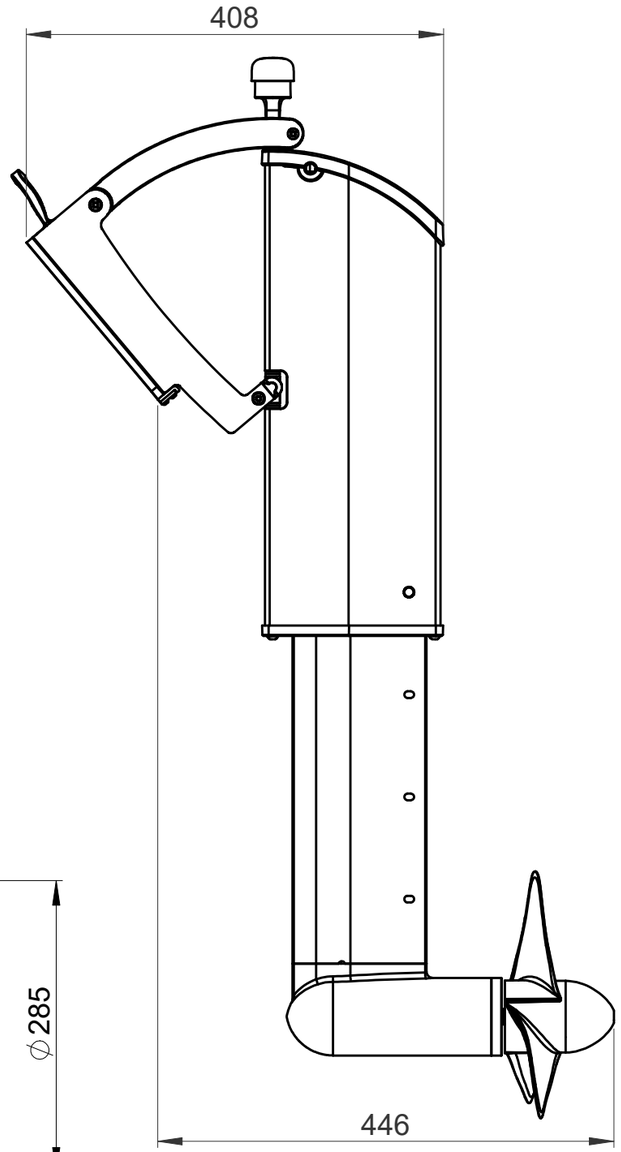

Frame

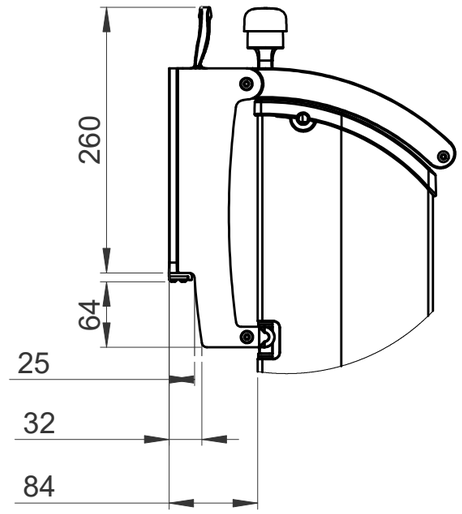

Swim clearance

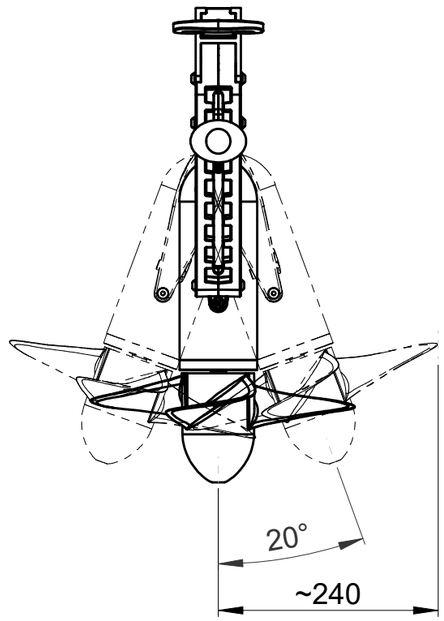

Revision Description	Revised By	Approved By	Date

General tolerances SFS-EN 22768-1, SFS-EN ISO 13920	Material	Designed By	Date
Scale A3 1:6	Dimensions / Mass 6711.00 kg	Approved By	Date
Remoran Oy	Description Main Assembly	Drawing number 100679	Rev